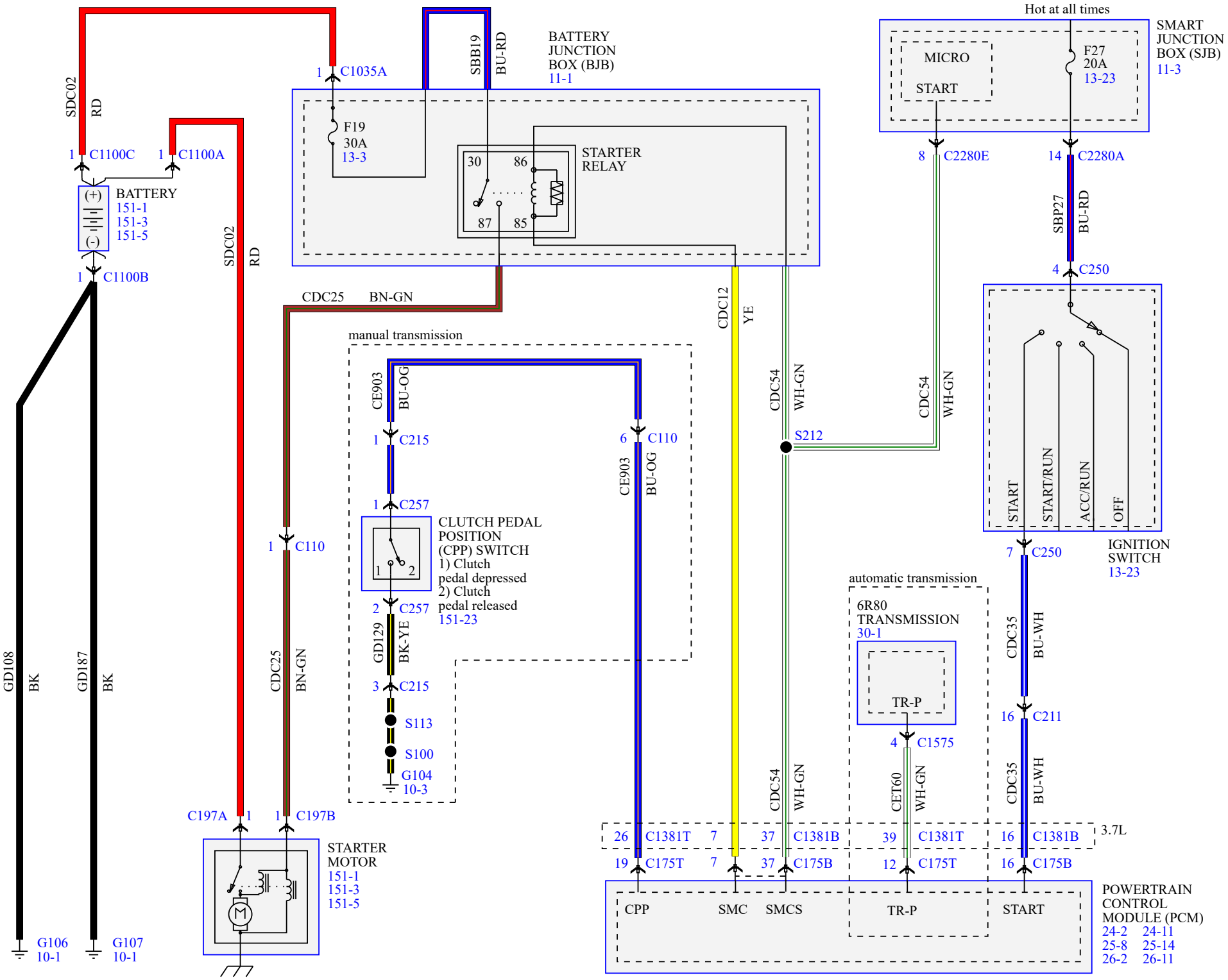
Hot at all times
SMART JUNCTION BOX (SJB) 11-3
MICRO
START
F27 20A 13-23
8 C2280E
14 C2280A
SBP27 BU-RD
4 C250
START
START/RUN
ACC/RUN
OFF
IGNITION SWITCH 13-23
7 C250
CDC35 BU-WH
16 C211
CDC35 BU-WH
16 C1381B
16 C175B
BATTERY JUNCTION BOX (BJB) 11-1
SBB19 BU-RD
1 C1035A
F19 30A 13-3
STARTER RELAY
30
86
87
85
SDC02 RD
1 C1100C
1 C1100A
BATTERY 151-1 151-3 151-5
(+)
(-)
1 C1100B
SDC02 RD
CDC25 BN-GN
CDC12 YE
CDC54 WH-GN
S212
CDC54 WH-GN
manual transmission
CE903 BU-OG
1 C215
1 C257
CLUTCH PEDAL POSITION (CPP) SWITCH
1) Clutch pedal depressed
2) Clutch pedal released
151-23
2 C257
GD129 BK-YE
3 C215
S113
S100
G104 10-3
6 C110
CE903 BU-OG
1 C110
CDC25 BN-GN
automatic transmission
6R80 TRANSMISSION 30-1
TR-P
4 C1575
CET60 WH-GN
CDC54 WH-GN
GD108 BK
GD187 BK
G106 10-1
G107 10-1
C197A 1
1 C197B
STARTER MOTOR 151-1 151-3 151-5
26 C1381T
7 37 C1381B
39 C1381T
3.7L
19 C175T
7 37 C175B
12 C175T
CPP
SMC
SMCS
TR-P
START
POWERTRAIN CONTROL MODULE (PCM)
24-2 24-11
25-8 25-14
26-2 26-11