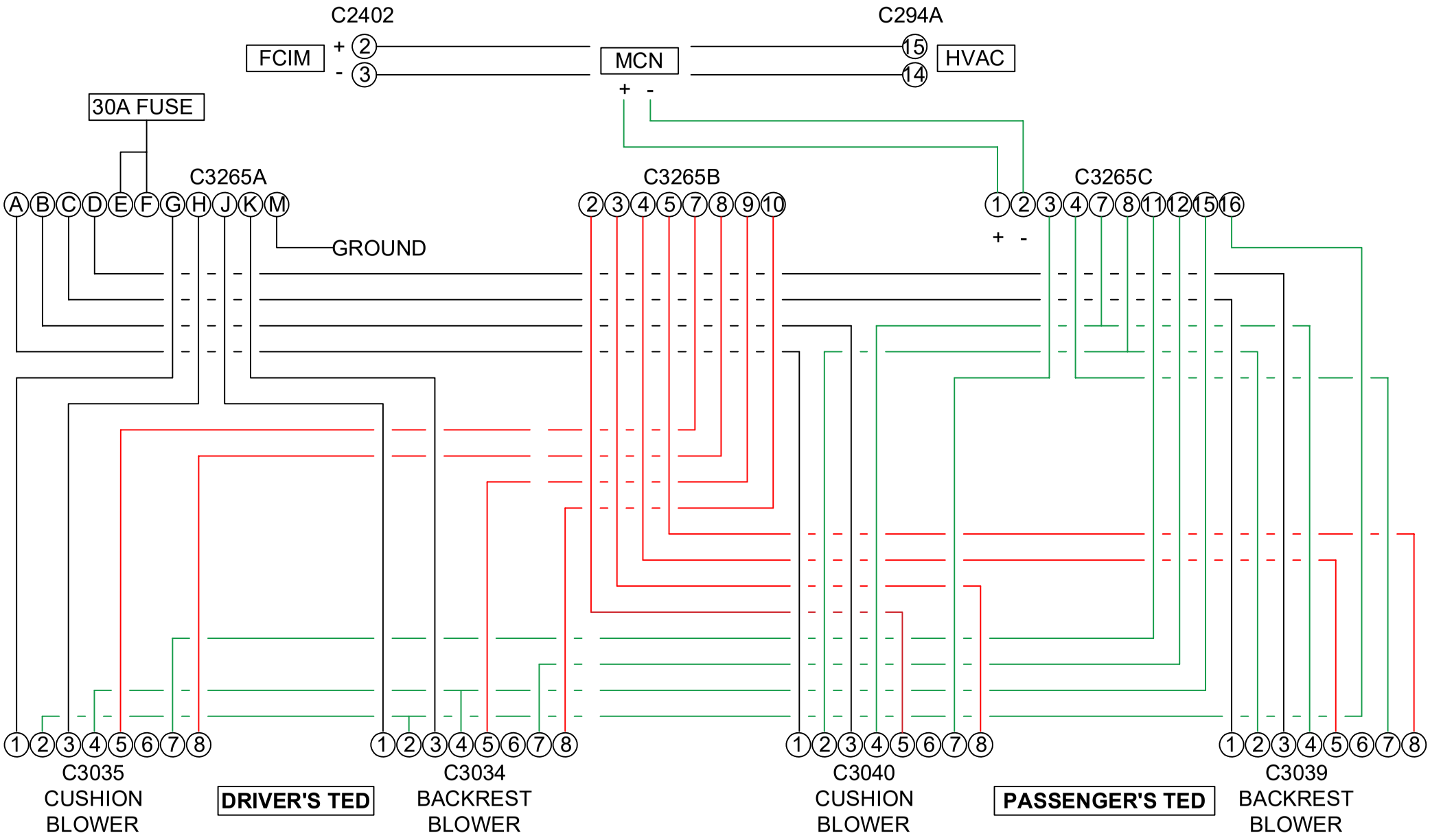
C2402
FCIM
+ 2
- 3
MCN
+ -
C294A
15
14
HVAC
30A FUSE
C3265A
A B C D E F G H J K M
GROUND
C3265B
2 3 4 5 7 8 9 10
C3265C
1 2 3 4 7 8 11 12 15 16
+ -
1 2 3 4 5 6 7 8
C3035
CUSHION
BLOWER
DRIVER'S TED
C3034
BACKREST
BLOWER
C3040
CUSHION
BLOWER
PASSENGER'S TED
C3039
BACKREST
BLOWER