G402, G403

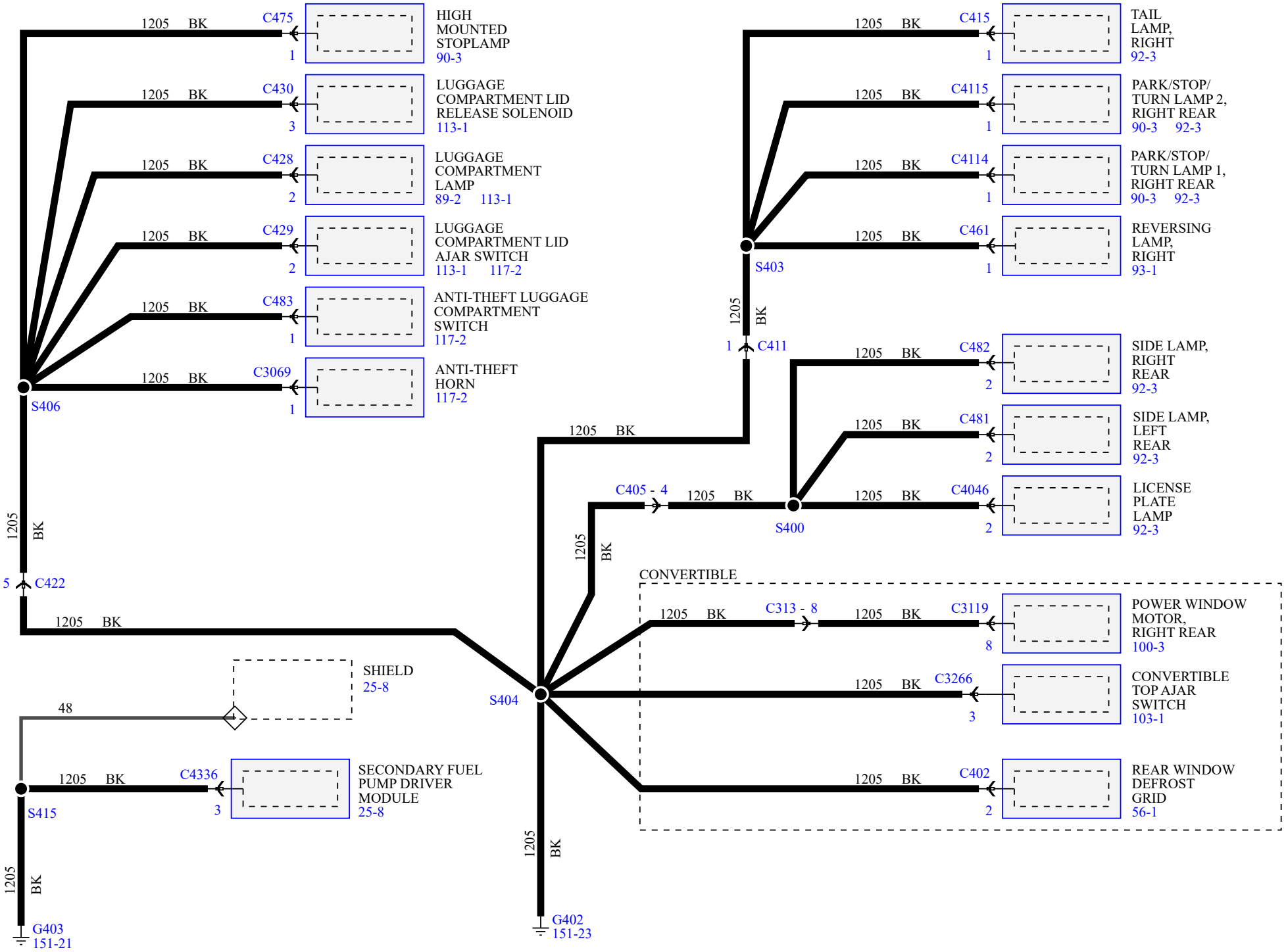
1205 BK
C475
1
HIGH MOUNTED STOPLAMP
90-3
C430
3
LUGGAGE COMPARTMENT LID RELEASE SOLENOID
113-1
C428
2
LUGGAGE COMPARTMENT LAMP
89-2 113-1
C429
2
LUGGAGE COMPARTMENT LID AJAR SWITCH
113-1 117-2
C483
1
ANTI-THEFT LUGGAGE COMPARTMENT SWITCH
117-2
C3069
1
ANTI-THEFT HORN
117-2
S406
C415
1
TAIL LAMP, RIGHT
92-3
C4115
1
PARK/STOP/ TURN LAMP 2, RIGHT REAR
90-3 92-3
C4114
1
PARK/STOP/ TURN LAMP 1, RIGHT REAR
90-3 92-3
C461
1
REVERSING LAMP, RIGHT
93-1
S403
C411
C482
2
SIDE LAMP, RIGHT REAR
92-3
C481
2
SIDE LAMP, LEFT REAR
92-3
C405 - 4
C4046
2
LICENSE PLATE LAMP
92-3
S400
C422
5
CONVERTIBLE
C313 - 8
C3119
8
POWER WINDOW MOTOR, RIGHT REAR
100-3
C3266
3
CONVERTIBLE TOP AJAR SWITCH
103-1
C402
2
REAR WINDOW DEFROST GRID
56-1
S404
SHIELD
25-8
48
C4336
3
SECONDARY FUEL PUMP DRIVER MODULE
25-8
S415
G403
151-21
G402
151-23