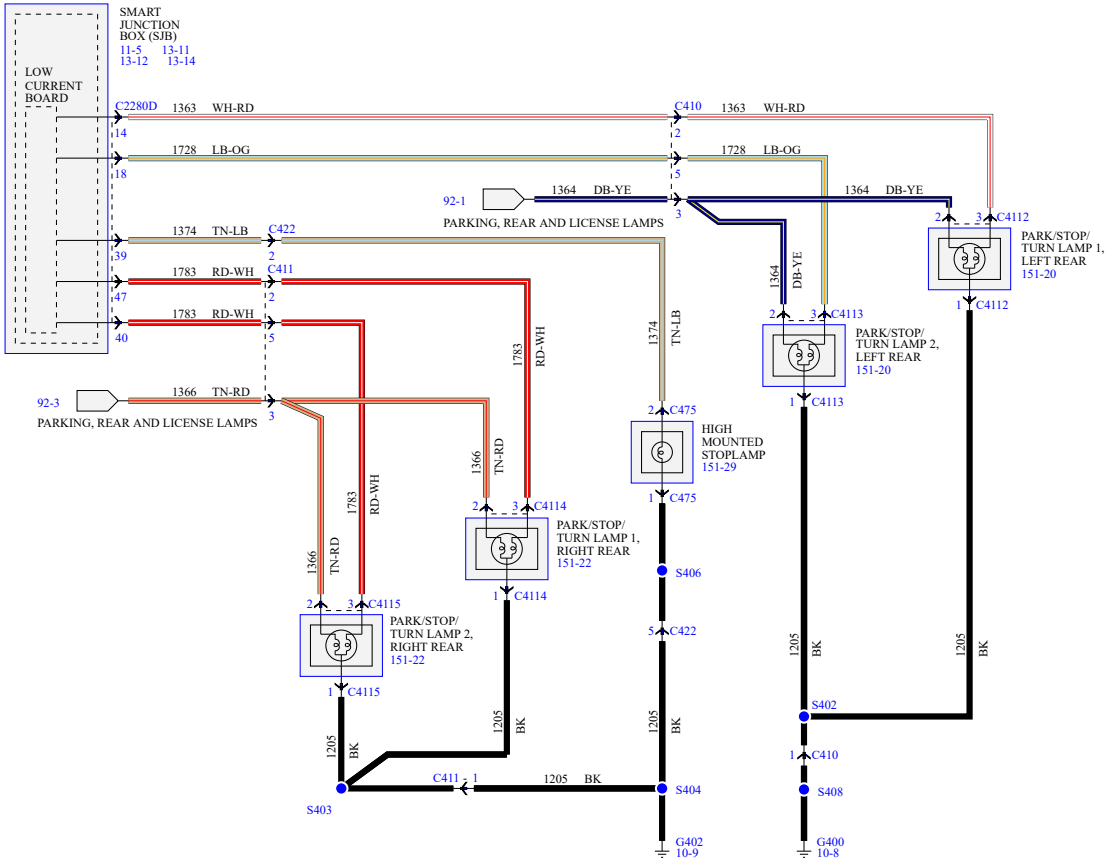
SMART JUNCTION BOX (SJB)
11-5 13-11
13-12 13-14
LOW CURRENT BOARD
C2280D
14
18
39
47
40
1363 WH-RD
1728 LB-OG
1374 TN-LB
1783 RD-WH
1783 RD-WH
1366 TN-RD
92-3
PARKING, REAR AND LICENSE LAMPS
C422
C411
C410
1363 WH-RD
1728 LB-OG
92-1
1364 DB-YE
PARKING, REAR AND LICENSE LAMPS
1364 DB-YE
1364 DB-YE
C4112
PARK/STOP/ TURN LAMP 1, LEFT REAR 151-20
C4113
PARK/STOP/ TURN LAMP 2, LEFT REAR 151-20
1374 TN-LB
C475
HIGH MOUNTED STOPLAMP 151-29
S406
C422
1783 RD-WH
1366 TN-RD
C4114
PARK/STOP/ TURN LAMP 1, RIGHT REAR 151-22
C4115
PARK/STOP/ TURN LAMP 2, RIGHT REAR 151-22
1205 BK
S403
C411
S404
G402 10-9
S402
C410
S408
G400 10-8