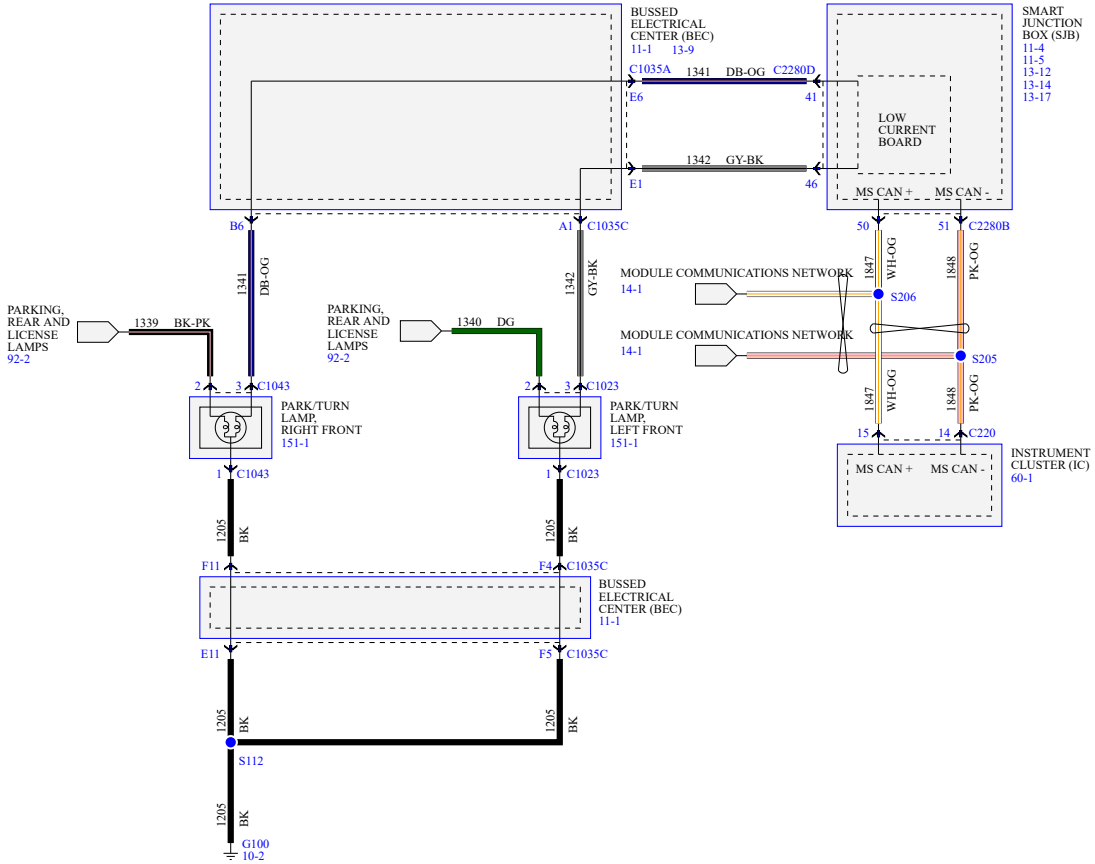
BUSSED ELECTRICAL CENTER (BEC)
11-1 13-9
SMART JUNCTION BOX (SJB)
11-4
11-5
13-12
13-14
13-17
C1035A
1341 DB-OG
C2280D
E6
41
LOW CURRENT BOARD
1342 GY-BK
E1
46
MS CAN +
MS CAN -
B6
A1
C1035C
50
51
C2280B
1341 DB-OG
1342 GY-BK
MODULE COMMUNICATIONS NETWORK
14-1
1847 WH-OG
1848 PK-OG
S206
S205
PARKING, REAR AND LICENSE LAMPS
92-2
1339 BK-PK
1340 DG
2
3
C1043
C1023
PARK/TURN LAMP, RIGHT FRONT
151-1
PARK/TURN LAMP, LEFT FRONT
151-1
1
15
14
C220
INSTRUMENT CLUSTER (IC)
60-1
1205 BK
F11
F4
BUSSED ELECTRICAL CENTER (BEC)
11-1
E11
F5
S112
G100
10-2